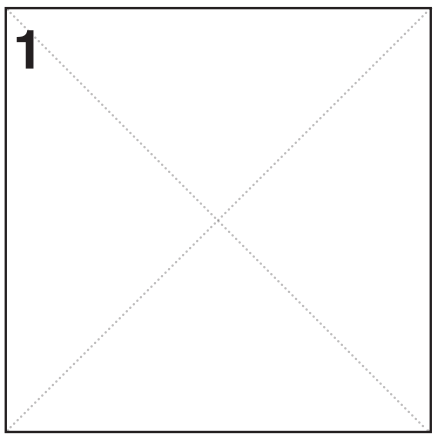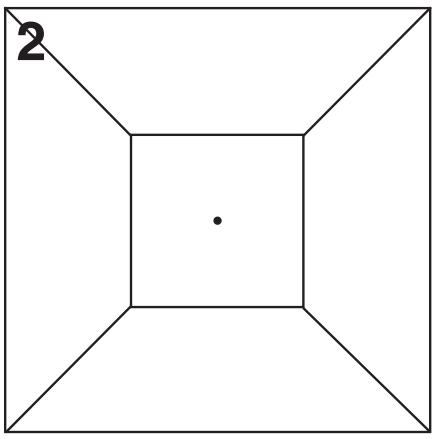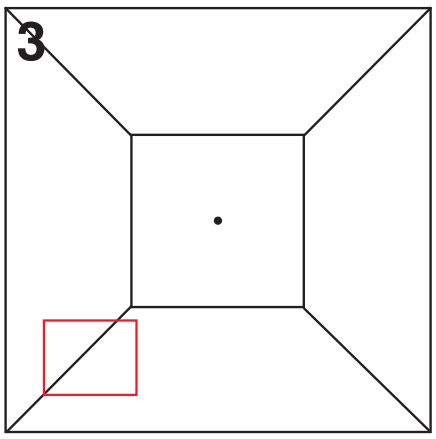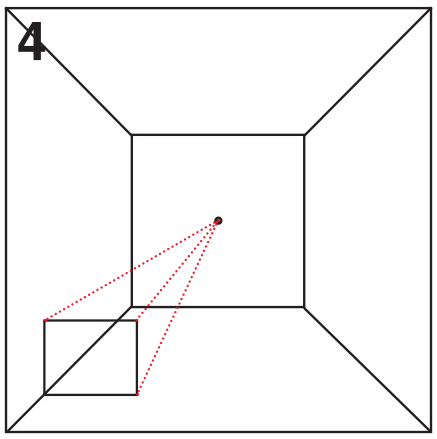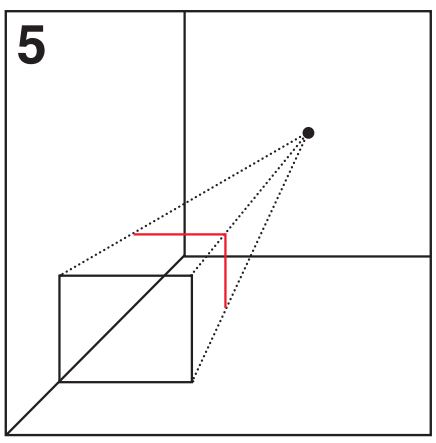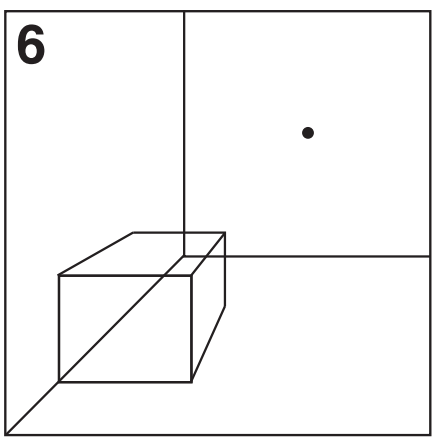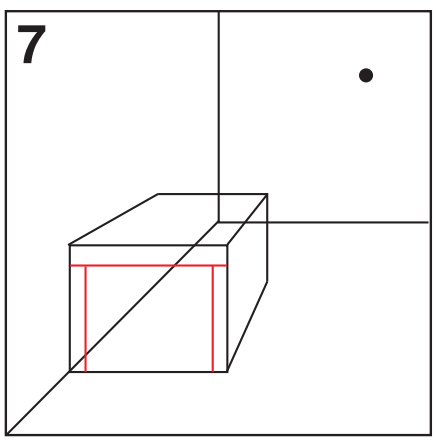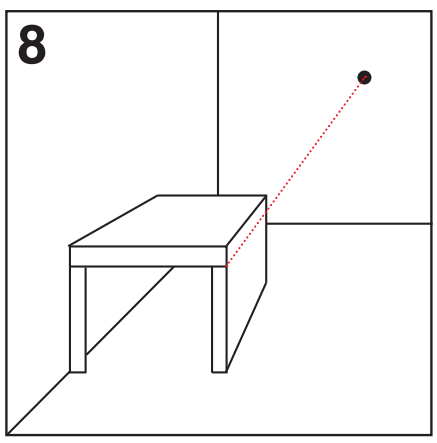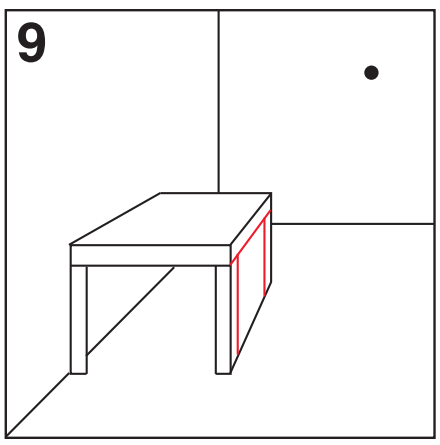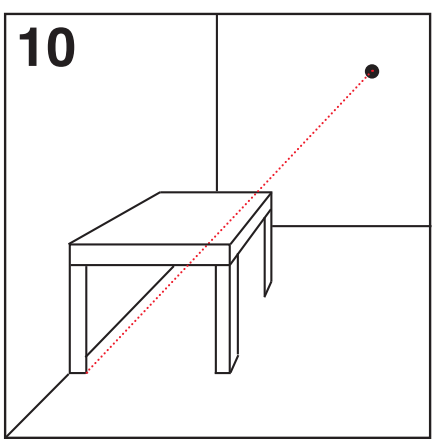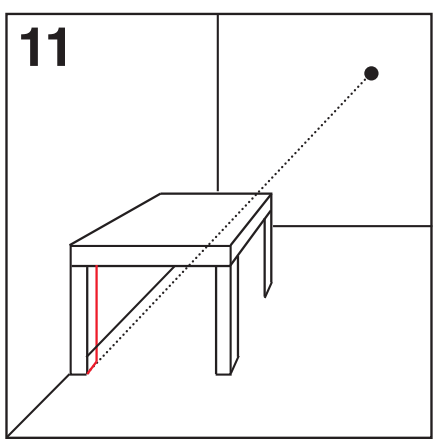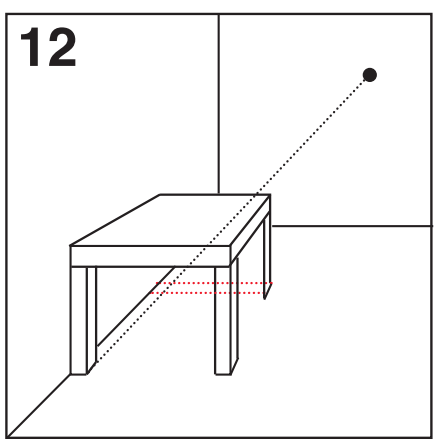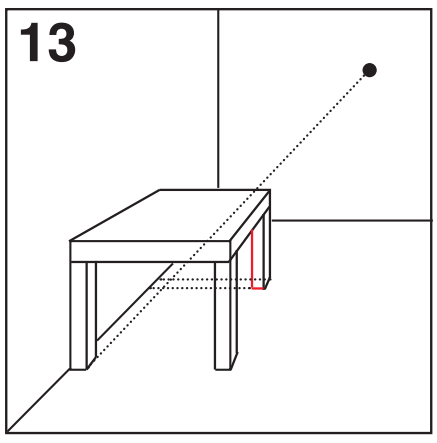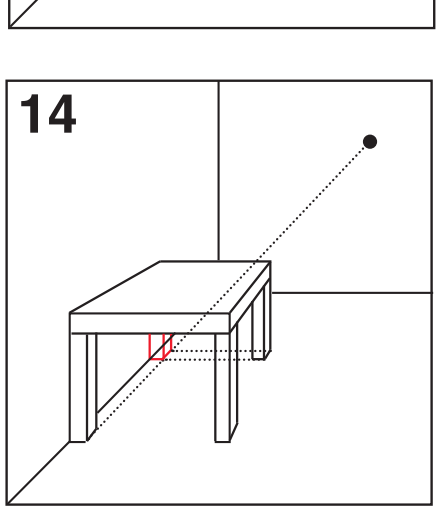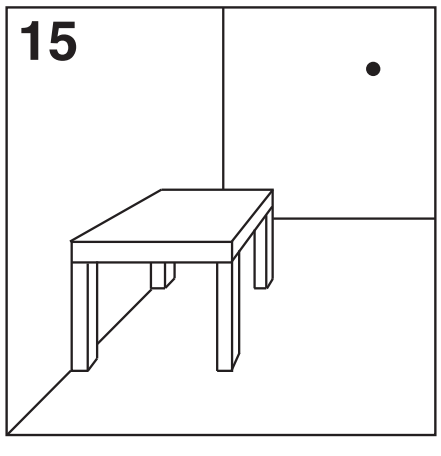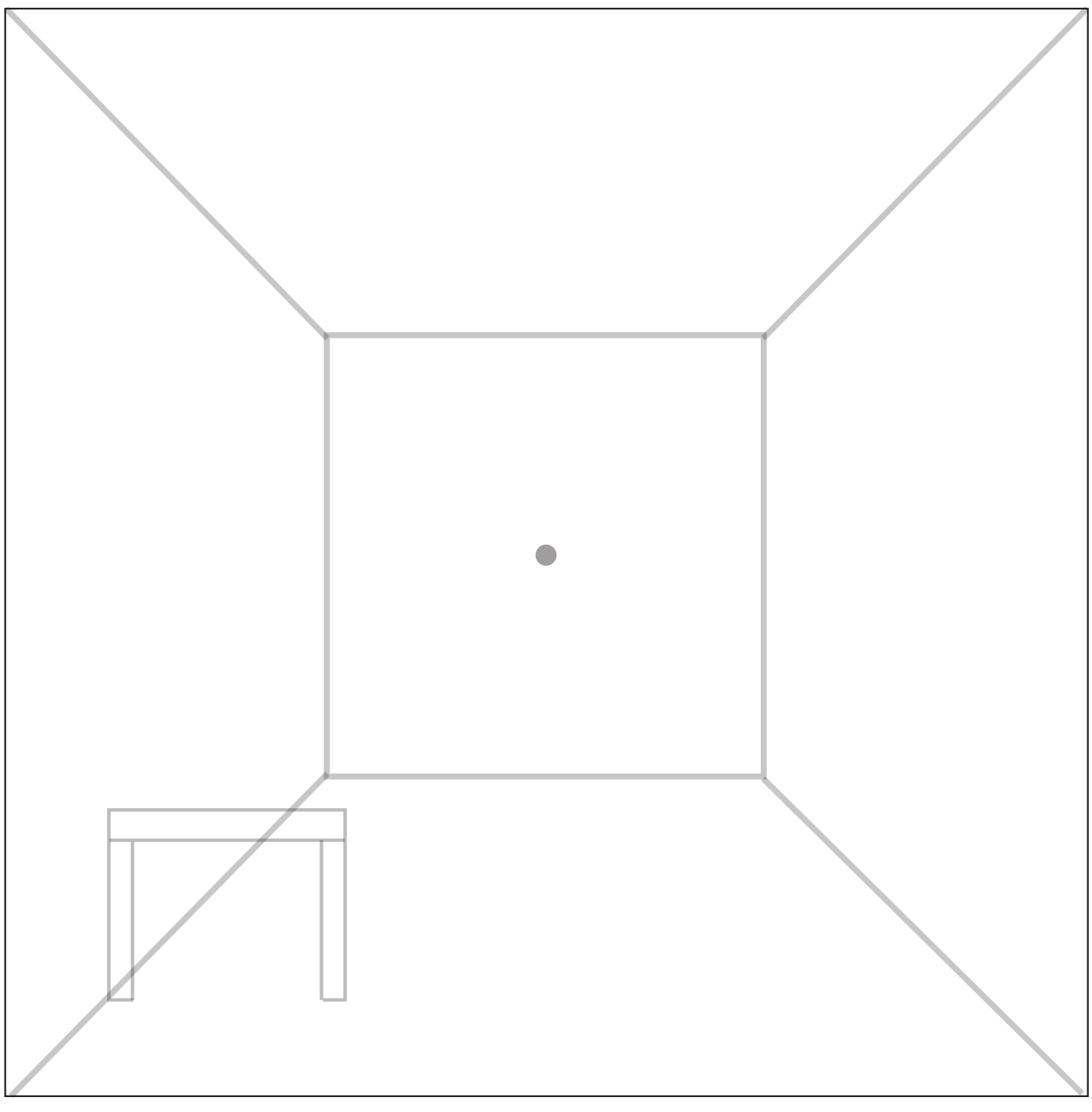One-point perspective: Table